DX30Z

CONTENTS **PAGE**

1. GENERAL SPECIFICATION 2
2. ENGINE SYSTEM 3
3. HYDRAULIC SYSTEM 3
4. SWING MECHANISM 4
5. TRAVEL MECHANISM 4
6. HYDRAULIC CYLINDERS 4
7. FRONT 5
8. DIMENSIONS & WORKING RANGE 6
9. LIFTING CAPACITIES 8
10. PERFORMANCE DATA 12
11. NOISE LEVEL 12
12. SUB GROUP WEIGHTS 12
13. USER SERVICE DATA 13

1. GENERAL SPECIFICATION

ITEMS		UNIT	STD.	OPT1.
OPERATING WEIGHT		***ton***	***3.18***	←
BUCKET CAPACITY(CECE/SAE)		***m^3***	***0.078/0.091***	←
ENGINE	RATED POWER	***PS/rpm***	***23.7/2,400***	←
	MAX. TORQUE	***kg.m/rpm***	***8.97/1,200***	←
SYSTEM PRESSURE (WORK/TRAVEL)		***kg/cm^2***	***210***	←
SWING SPEED		***rpm***	***9.7***	←
TRAVEL SPEED (1-Speed/2-Speed)		***km/h***	***2.6/4.6***	←
GRADEABILITY		***%(deg)***	***58 (30°)***	←
SHOE WIDTH		***mm***	***300***	←
GROUND PRESSURE		***kg/cm^2***	***0.29***	←
DIGGING FORCE	BUCKET	***ton***	***2.8***	←
	ARM	***ton***	***1.8***	***1.7***
WORKINGRANGE	MAX. DIGGING REACH	***mm***	***4,882***	***4,984***
	MAX. DIGGING DEPTH	***mm***	***2,838***	***2,948***
	MAX. DIGGING HEIGHT	***mm***	***4,555***	***4,618***
	REAR SWING RADIUS	***mm***	***775***	←
	MIN. SWING RADIUS	***mm***	***2015***	***2,034***
TRANSPOR–TATIONDIMENSION	OVERALL LENGTH	***mm***	***4,507***	***4,507***
	OVERALL WIDTH	***mm***	***1,550***	←
	OVERALL HEIGHT	***mm***	***2,480***	←
	GROUND CLEARANCE	***mm***	***300***	←
	TRACK LENGTH	***mm***	***2,100***	←
	TRACK GAUGE	***mm***	***1,250***	←
BOOM SWING ANGLE (LxR)		***degree***	***70 / 50***	←
DOZER BLADE(WIDTH x HEIGHT)		***mm***	***1,550 x 310***	←
OPTION ATTACHMENTS		- STEEL CRAWLER - CANOPY - LONG ARM 1.3M - QUICK CLAMP PIPE	- ACCUMULATOR - ROTATING BEACON - ADDITIONAL WEIGHT - PATTERN CHANGE VALVE	

STANDARD : ***STD BOOM (2,280 mm) STD ARM (1,190 mm) STD BUCKET (0.091m^3)***
OPTION 1 : ***STD BOOM (2,280 mm) LONG ARM (1,300 mm) STD BUCKET (0.091m^3)***

2. ENGINE SYSTEM

2.1) ENGINE

RATED HORSE POWER	:	***24.6PS / 2,400 rpm (KS R1004)***
		17.4KW (23.7 PS) / 2,400 rpm (DIN 6271)
		17.4 KW (23.3HP) / 2,400 rpm (SAE J 1349)
MAX. TORQUE	:	***8.97 kg.m / 1200 rpm***
DISPLACEMENT	:	***1,331 cc***
No. OF CYLINDER	:	***3***
BORE & STROKE	:	***Φ 82 x 84 mm***

3. HYDRAULIC SYSTEM

3.1) MAIN PUMP

QUANTITY	:	***1***
DISPLACEMENT	:	***2 X 15.5 cc /rev***
MAX. FLOW RATE	:	***2 X 37.2 Liter/min***
RELIEF VALVE	:	***210kg/cm²***

3.2) PUMP (S/W, BOOM S/W, D/Z)

DISPLACEMENT	:	***8.5 cc/rev.***
RELIEF VALVE	:	***210kg/cm²***

3.3) PILOT PUMP

DISPLACEMENT	:	***4.5 cc/rev.***
RELIEF VALVE	:	***30kg/cm²***
SOLENOID VALVE	:	***12V , 19.84W***

3.4) CONTROL VALVE

RELIEF VALVE PRESSURE	:	***210kgf/cm²***
PORT RELIEF VALVE PRESSURE	:	***245 kgf/cm² AT 5L/min***

4. SWING MECHANISM

4.1) SWING PERFORMANCE

MAX. SWING SPEED	:	***9.67 rpm***
MAX. SWING TORQUE	:	***696 kgf.m***

5. TRAVEL MECHANISM

5.1) TRAVEL SYSTEM

5.1.1) TRAVEL PERFORMANCE

TRAVEL SPEED	:	***4.6 / 2.6 km/hr.***
TRACTION FORCE	:	***2.75 / 1.43 ton.***
GRADEABILITY	:	***59 %.***

5.2) UNDER CARRIAGE

5.2.1) ROLLERS : LOWER

Q'TY PER SIDE : ***4***

SHOE WIDTH (mm)	GROUND PRESSURE (bar)	MACHINE WEIGHT (ton)
300	***0.29***	***3.18***

6. HYDRAULIC CYLINDERS

	BOOM	ARM	BUCKET	DOZER	B/SWING
QUANTITY (EA)	***1***	***1***	***1***	***1***	***1***
BORE	***Φ 80***	***Φ 75***	***Φ 70***	***Φ 85***	***Φ 80***
STROKE	***573***	***598***	***515***	***127***	***390***

7. FRONT

7.1) FRONT LINKAGE PIN SIZES

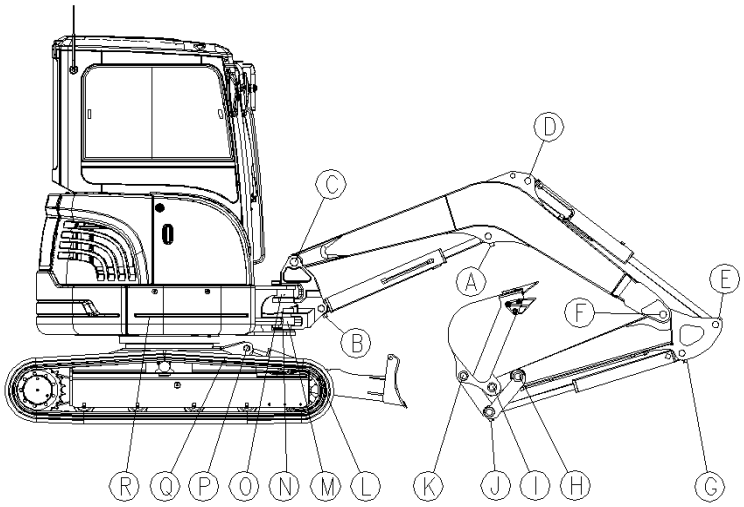

POINT	PIN DIA.(mm)	LENGTH(mm)	POINT	PIN DIA.(mm)	LENGTH(mm)
A	***Φ40***	***185***	***J***	***Φ40***	***232***
B	***Φ40***	***247***	***K***	***Φ40***	***236***
C	***Φ50***	***305***	***L***	***Φ40***	***116***
D	***Φ40***	***161***	***M***	***Φ35***	***139***
E	***Φ40***	***149***	***N***	***Φ70***	***136***
F	***Φ45***	***222***	***O***	***Φ70***	***171***
G	***Φ40***	***149***	***P***	***Φ40***	***116***
H	***Φ40***	***232***	***Q***	***Φ40***	***123***
I	***Φ40***	***236***	***R***	***Φ35***	***159***

7.2) FRONT ATTACHMENTS

7.2.1) BOOM

	LENGTH (mm)	WEIGHT (kg)
STD. BOOM	***2,280***	***122***

7.2.2) ARM

	LENGTH (mm)	WEIGHT (kg)	DIGGING FORCE(ton)
STD. ARM	***1,190***	***67.5***	***1.8***
OPT. ARM	***1,300***	***70.5***	***1.7***

7.2.3) BUCKET

	CAPACITY(㎥)		BUCKET WIDTH (mm)		DIGGING FORCE (ton)
	CECE	SAE	W/CUTTER	W/O CUTTER	
STD. BUCKET	***0.078***	***0.091***	***506***	***480***	***2.8***

7.3) OPTION PIPING

MAIN SUPPLY PIPING : ***OPTION.***

FRONT SUPPLY PIPING : ***OPTION..***

AVAILABLE ATTACHMENT : ***BREAKER.***

8. DIMENSION & WORKING RANG

8.1) DIMENSIONS

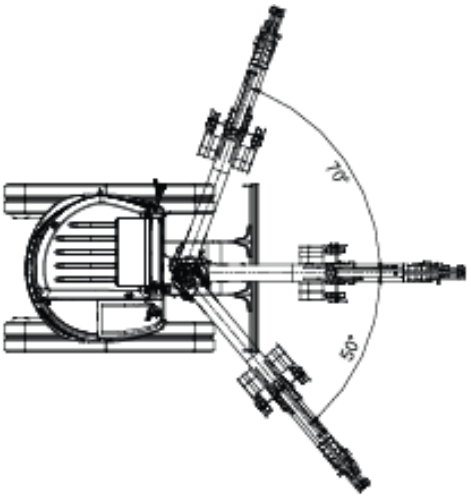

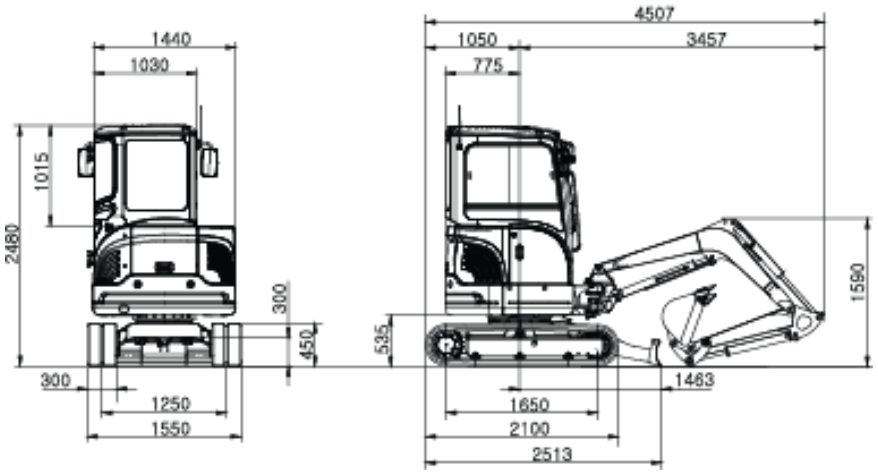

8.2) WORKING RANGE

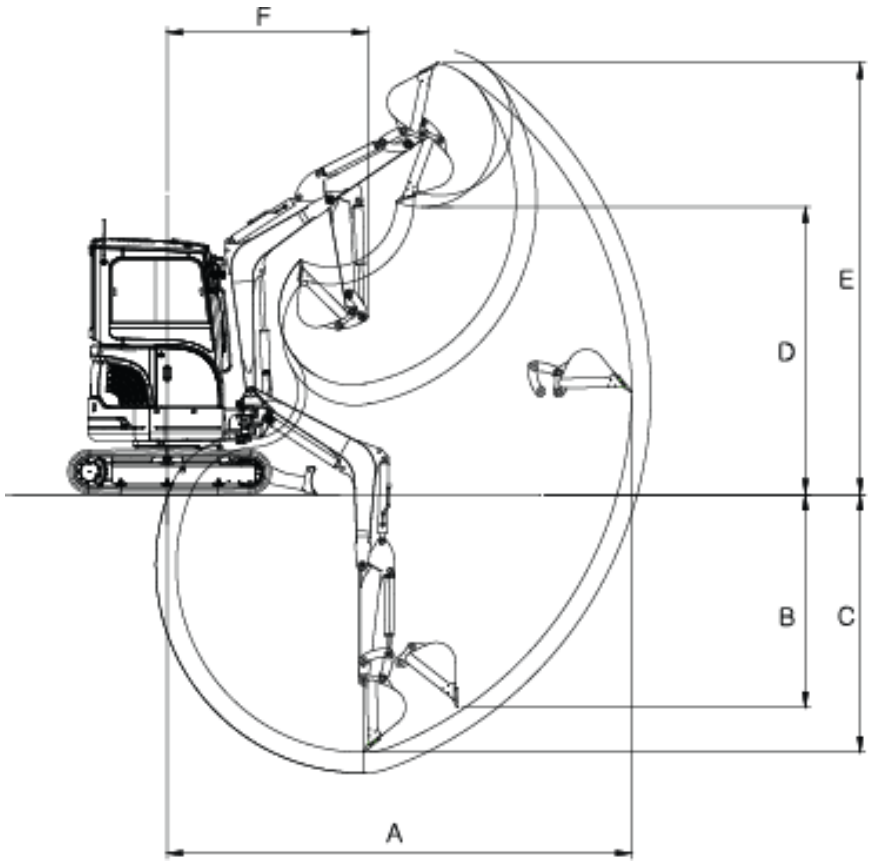

BOOM TYPE	***(mm)***		***2280***	
ARM TYPE	***(mm)***		***1,190***	***1,300***
BUCKET TYPE(SAE)	***(m^3)***		***0.09***	***0.09***
MAX. DIGGING REACH	***(mm)***	***A***	***4882***	***4,984***
MAX. VERTICAL WALL DEPTH	***(mm)***	***B***	***2,278***	***2,383***
MAX. DIGGING DEPTH	***(mm)***	***C***	***2,838***	***2,948***
MAX. LOADING HEIGHT	***(mm)***	***D***	***3,122***	***3,185***
MAX. DIGGING HEIGHT	***(mm)***	***E***	***4,555***	***4,618***
MIN. DIGGING RADIUS	***(mm)***	***F***	***2,015***	***2,034***

9. LIFTING CAPACITIES

9.1) LIFTING CAPACITIES(DOZER UP)

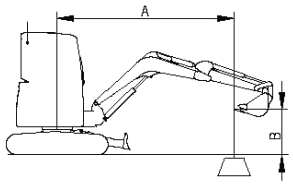

WITHOUT DOZER

TRACK WIDTH	:	1.55m (5'1")
BOOM	:	2.28 m (7' 6")
ARM	:	1.19 m (3' 11")
BUCKET	:	SAE 0.091 m^3 (CECE 0.078 m^3)
SHOE	:	300 mm (11.8")
	:	RATING OVER FRONT
	:	RATING OVER SIDE OR 360 degree
UNIT	:	1,000 kg (1,000 lb)

METRIC

A(m) / B(m)	2		2.5		3		3.5		MAX. REACH		
											A(m)
3					***0.50**	**0.50**			**0.55**	**0.38**	**3.50**
2.5					***0.55**	**0.50**	**0.56**	**0.38**	**0.48**	**0.33**	**3.81**
2	**0.90**	**0.90**	**0.73**	**0.66**	***0.65**	**0.49**	**0.55**	**0.38**	**0.44**	**0.30**	**4.01**
1.5			**0.95**	**0.63**	**0.70**	**0.48**	**0.55**	**0.37**	**0.42**	**0.28**	**4.12**
1			**0.92**	**0.61**	**0.69**	**0.47**	**0.54**	**0.37**	**0.41**	**0.27**	**4.16**
0.5			**0.90**	**0.60**	**0.68**	**0.46**	**0.53**	**0.36**	**0.41**	**0.28**	**4.12**
0 (GROUND)	**1.27**	**0.83**	**0.90**	**0.59**	**0.67**	**0.45**	**0.53**	**0.36**	**0.43**	**0.29**	**4.00**
-0.5	**1.31**	**0.83**	**0.90**	**0.59**	**0.67**	**0.45**	**0.53**	**0.35**	**0.47**	**0.31**	**3.80**
-1	**1.32**	**0.84**	**0.90**	**0.59**	**0.67**	**0.45**			**0.54**	**0.36**	**3.49**
-1.5	**1.34**	**0.86**	**0.91**	**0.60**	**0.68**	**0.46**			**0.67**	**0.45**	**3.02**

FEET

A(ft) / B(ft)	6'		8'		10'		12'		MAX. REACH		
											A(ft)
10'					**1.12**	**1.07**			**1.24**	**0.85**	**11.4**
8'					**1.23**	**1.06**	**1.14**	**0.78**	**1.05**	**0.71**	**12.7**
6'			**1.83**	**1.49**	**1.51**	**1.04**	**1.13**	**0.77**	**0.95**	**0.64**	**13.4**
4'			**2.14**	**1.42**	**1.49**	**1.01**	**1.12**	**0.76**	**0.91**	**0.61**	**13.7**
2'			**2.08**	**1.37**	**1.47**	**0.98**	**1.10**	**0.74**	**0.91**	**0.61**	**13.7**
0 (GROUND)	**2.10**	**2.10**	**2.06**	**1.35**	**1.45**	**0.97**	**1.09**	**0.73**	**0.95**	**0.64**	**13.1**
-2'	**3.43**	**2.14**	**2.06**	**1.35**	**1.44**	**0.96**	**1.09**	**0.73**	**1.06**	**0.71**	**12.3**
-4'	**3.47**	**2.17**	**2.08**	**1.37**	**1.45**	**0.97**			**1.29**	**0.87**	**10.10**

1 LOAD POINT IS THE HOOK ON THE BACK OF THE BUCKET.
2 * RATED LOADS ARE BASED ON HYDRAULIC CAPACITY.
3 RATED LOADS DO NOT EXCEED 87% OF HYD. CAPACITY OR 75% OF TIPPING CAPACITY.

9.2) LIFTING CAPACITIES(DOZER DOWN)

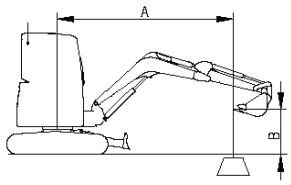

WITH DOZER

TRACK WIDTH	: 1.55 m (5'1")
BOOM	: 2.28 m (7' 6")
ARM	: 1.19 m (3' 11")
BUCKET	: SAE 0.091 m^3 (CECE 0.078 m^3)
SHOE	: 300 mm (11.8")
	: RATING OVER FRONT
	: RATING OVER SIDE OR 360 degree
UNIT	: 1,000 kg (1,000 lb)

METRIC

A(m) / B(m)	2		2.5		3		3.5		MAX. REACH		
											A(m)
3					***0.50***	***0.50***			***0.57***	***0.38***	***3.50***
2.5					***0.55***	***0.49***	***0.56***	***0.38***	***0.59***	***0.33***	***3.81***
2	***0.90***	***0.90***	***0.73***	***0.65***	***0.65***	***0.49***	***0.61***	***0.38***	***0.61***	***0.30***	***4.01***
1.5			***0.98***	***0.63***	***0.78***	***0.48***	***0.68***	***0.37***	***0.63***	***0.28***	***4.12***
1			***1.22***	***0.61***	***0.92***	***0.46***	***0.76***	***0.36***	***0.66***	***0.27***	***4.16***
0.5			***1.38***	***0.59***	***1.02***	***0.45***	***0.83***	***0.36***	***0.69***	***0.28***	***4.12***
0 (GROUND)	***1.27***	***0.83***	***1.45***	***0.59***	***1.09***	***0.45***	***0.87***	***0.36***	***0.72***	***0.29***	***4.00***
-0.5	***2.00***	***0.83***	***1.44***	***0.59***	***1.10***	***0.45***	***0.87***	***0.35***	***0.76***	***0.31***	***3.80***
-1	***1.83***	***0.84***	***1.37***	***0.59***	***1.05***	***0.45***			***0.81***	***0.36***	***3.49***
-1.5	***1.63***	***0.85***	***1.20***	***0.60***	***0.88***	***0.46***			***0.87***	***0.45***	***3.02***

FEET

A(ft) / B(ft)	6'		8'		10'		12'		MAX. REACH		
											A(ft)
10'					***1.12***	***1.07***			***1.25***	***0.85***	***11'4"***
8'					***1.23***	***1.06***	***1.27***	***0.77***	***1.30***	***0.71***	***12'7"***
6'			***1.83***	***1.48***	***1.51***	***1.04***	***1.37***	***0.77***	***1.35***	***0.64***	***13'4"***
4'			***2.58***	***1.42***	***1.86***	***1.01***	***1.54***	***0.75***	***1.42***	***0.61***	***13' 7"***
2'			***3.12***	***1.37***	***2.16***	***0.98***	***1.70***	***0.74***	***1.50***	***0.60***	***13' 7"***
0 (GROUND)	***2.10***	***2.10***	***3.32***	***1.35***	***2.34***	***0.97***	***1.80***	***0.73***	***1.59***	***0.63***	***13' 1"***
-2'	***4.05***	***2.13***	***3.28***	***1.35***	***2.35***	***0.96***	***1.77***	***0.73***	***1.70***	***0.71***	***12' 3"***
-4'	***4.46***	***2.16***	***2.99***	***1.36***	***2.14***	***0.97***			***1.83***	***0.86***	***10'10"***

1 LOAD POINT IS THE HOOK ON THE BACK OF THE BUCKET.
2 * RATED LOADS ARE BASED ON HYDRAULIC CAPACITY.
3 RATED LOADS DO NOT EXCEED 87% OF HYD. CAPACITY OR 75% OF TIPPING CAPACITY

9.3) LIFTING CAPACITIES(1.3m ARM AND DOZER UP)

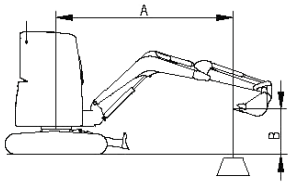

WITHOUT DOZER

TRACK WIDTH	:	1.55 m (5'1")
BOOM	:	2.28 m (7'6")
ARM	:	1.3 m (4' 3")
BUCKET	:	SAE 0.091 m^3 (CECE 0.078 m^3)
SHOE	:	300 mm (11.8")
	:	RATING OVER FRONT
	:	RATING OVER SIDE OR 360 degree
UNIT	:	1,000 kg (1,000 lb)

METRIC

A(m) / B(m)	2		2.5		3		3.5		MAX. REACH		
											A(m)
3					***0.46***	***0.46***	***0.52***	***0.38***	***0.52***	***0.35***	***3.63***
2.5					***0.51***	***0.50***	***0.53***	***0.38***	***0.46***	***0.31***	***3.92***
2			***0.66***	***0.66***	***0.61***	***0.49***	***0.55***	***0.38***	***0.42***	***0.28***	***4.11***
1.5			***0.92***	***0.63***	***0.70***	***0.48***	***0.55***	***0.37***	***0.40***	***0.27***	***4.22***
1			***0.92***	***0.61***	***0.69***	***0.46***	***0.54***	***0.36***	***0.39***	***0.26***	***4.26***
0.5			***0.90***	***0.59***	***0.68***	***0.45***	***0.53***	***0.36***	***0.39***	***0.26***	***4.22***
0 (GROUND)	***1.29***	***0.82***	***0.89***	***0.58***	***0.67***	***0.45***	***0.53***	***0.35***	***0.41***	***0.27***	***4.11***
-0.5	***1.30***	***0.83***	***0.89***	***0.58***	***0.67***	***0.44***	***0.52***	***0.35***	***0.44***	***0.30***	***3.91***
-1	***1.31***	***0.83***	***0.89***	***0.59***	***0.67***	***0.44***	***0.53***	***0.35***	***0.50***	***0.34***	***3.61***
-1.5	***1.33***	***0.84***	***0.90***	***0.59***	***0.67***	***0.45***			***0.62***	***0.41***	***3.18***

FEET

A(ft) / B(ft)	6'		8'		10'		12'		MAX. REACH		
											A(ft)
10'					***1.02***	***1.02***			***1.17***	***0.79***	***11' 9"***
8'					***1.14***	***1.06***	***1.14***	***0.77***	***0.99***	***0.67***	***12'11"***
6'			***1.68***	***1.49***	***1.42***	***1.04***	***1.13***	***0.77***	***0.90***	***0.61***	***13' 8"***
4'			***2.14***	***1.42***	***1.49***	***1.01***	***1.11***	***0.75***	***0.87***	***0.58***	***13'11"***
2'			***2.07***	***1.36***	***1.46***	***0.98***	***1.10***	***0.74***	***0.87***	***0.57***	***13'11"***
0 (GROUND)	***2.15***	***2.10***	***2.05***	***1.34***	***1.44***	***0.96***	***1.08***	***0.72***	***0.90***	***0.60***	***13' 6"***
-2'	***3.40***	***2.11***	***2.04***	***1.34***	***1.43***	***0.95***	***1.08***	***0.72***	***1.00***	***0.67***	***12' 8"***
-4'	***3.44***	***2.14***	***2.06***	***1.35***	***1.44***	***0.96***			***1.20***	***0.80***	***11' 3"***

1 LOAD POINT IS THE HOOK ON THE BACK OF THE BUCKET.
2 * RATED LOADS ARE BASED ON HYDRAULIC CAPACITY.
3 RATED LOADS DO NOT EXCEED 87% OF HYD. CAPACITY OR 75% OF TIPPING CAPACITY

9.4) LIFTING CAPACITIES(1.3m ARM AND DOZER DOWN)

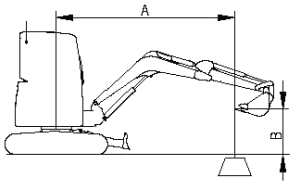

WITH DOZER

TRACK WIDTH	: 1.55 m (5'1")
BOOM	: 2.28 m (7' 6")
ARM	: 1.3 m (4' 3")
BUCKET	: SAE 0.091 m^3 (CECE 0.078 m^3)
SHOE	: 300 mm (11.8")
	: RATING OVER FRONT
	: RATING OVER SIDE OR 360 degree
UNIT	: 1,000 kg (1,000 lb)

METRIC

A(m) / B(m)	2		2.5		3		3.5		MAX. REACH		
											A(m)
3					***0.46***	***0.46***	***0.52***	***0.38***	***0.54***	***0.35***	***3.63***
2.5					***0.51***	***0.50***	***0.53***	***0.38***	***0.56***	***0.31***	***3.92***
2			***0.66***	***0.66***	***0.61***	***0.49***	***0.58***	***0.38***	***0.58***	***0.28***	***4.11***
1.5			***0.92***	***0.63***	***0.74***	***0.48***	***0.65***	***0.37***	***0.60***	***0.27***	***4.22***
1			***1.17***	***0.61***	***0.88***	***0.46***	***0.74***	***0.36***	***0.63***	***0.26***	***4.26***
0.5			***1.34***	***0.59***	***1.00***	***0.45***	***0.81***	***0.36***	***0.66***	***0.26***	***4.22***
0 (GROUND)	***1.29***	***0.82***	***1.43***	***0.58***	***1.07***	***0.45***	***0.86***	***0.35***	***0.69***	***0.27***	***4.11***
-0.5	***1.90***	***0.83***	***1.44***	***0.58***	***1.09***	***0.44***	***0.87***	***0.35***	***0.73***	***0.30***	***3.91***
-1	***1.92***	***0.83***	***1.39***	***0.59***	***1.06***	***0.44***	***0.83***	***0.35***	***0.78***	***0.34***	***3.61***
-1.5	***1.70***	***0.84***	***1.24***	***0.59***	***0.93***	***0.45***			***0.83***	***0.41***	***3.18***

FEET

A(ft) / B(ft)	6'		8'		10'		12'		MAX. REACH		
											A(ft)
10'					***1.02***	***1.02***			***1.19***	***0.79***	***11' 9"***
8'					***1.14***	***1.06***	***1.19***	***0.77***	***1.24***	***0.67***	***12'11"***
6'			***1.68***	***1.49***	***1.42***	***1.04***	***1.31***	***0.77***	***1.29***	***0.61***	***13' 8"***
4'			***2.44***	***1.42***	***1.78***	***1.01***	***1.49***	***0.75***	***1.36***	***0.58***	***13'11"***
2'			***3.03***	***1.36***	***2.10***	***0.98***	***1.66***	***0.74***	***1.44***	***0.57***	***13'11"***
0 (GROUND)	***2.15***	***2.10***	***3.29***	***1.34***	***2.31***	***0.96***	***1.78***	***0.72***	***1.53***	***0.60***	***13' 6"***
-2'	***3.82***	***2.11***	***3.29***	***1.34***	***2.35***	***0.95***	***1.79***	***0.72***	***1.63***	***0.67***	***12' 8"***
-4'	***4.62***	***2.14***	***3.06***	***1.35***	***2.20***	***0.96***			***1.76***	***0.80***	***11' 3"***

1 LOAD POINT IS THE HOOK ON THE BACK OF THE BUCKET.
2 * RATED LOADS ARE BASED ON HYDRAULIC CAPACITY.
3 RATED LOADS DO NOT EXCEED 87% OF HYD. CAPACITY OR 75% OF TIPPING CAPACITY

10. PERFORMANCE DATA

10.1) MAIN RELIEF PRESSURE

WOKING	:	***210kg/cm²***
TRAVELLING	:	***210kg/cm²***

11. NOISE LEVEL

SURFACE SOUND POWER LEVEL	:	***93 dB(A).***
OPERATOR NOISE LEVEL	:	***81dB(A).***

12. SUB GROUP WEIGHTS

ITEM	UNIT	FIGURE	REMARKS
UPPER STRUCTURE W/O FRONT	***kg***	***1,730***	***WITH C/W***
LOWER STRUCTURE	***kg***	***980.5***	***BELOW S/W BRG.***
FRONT ASS'Y	***kg***	***470***	
● COUNTER WEIGHT	***kg***	***427***	
● BOOM	***kg***	***122***	
● ARM	***kg***	***67.5***	
● BUCKET	***kg***	***83.5***	
● BOOM CYL. (EA)	***kg***	***30***	
● ARM CYL.	***kg***	***28.5***	
● BUCKET CYL.	***kg***	***23.1***	
● DOZER	***kg***	***117***	
● DOZER CYL.	***kg***	***16.8***	
● B/SWING CYL	***kg***	***24***	
● CENTER JOINT	***kg***	***14***	
● SWING BEARING	***kg***	***40***	
● SWING BRACKET	***kg***	***68***	

13. USER SERVICE DATA

SERVICE DATA									
No.	Items to Check	Service	Qty.	Service Interval					
				10	50	250	500	1000	2000
1	Radiator	Coolant (Antifreeze)	3.5 L	V					
2	Front & Blade	Grease	17	F100	W10				
3	Boom Swing Cylinder	Grease	4	F100					
4	Swing Gear	Grease	1						
5	Swing Bearing	Grease	1		W10				
6	Travel Reduction Device	Gear Oil (80W90)	0.5 L			V, F			
7	Engine Oil	Engine Oil (10W40)	5.5 L	V	F				
8	Hydraulic Oil Tank	Hydraulic Oil	30 L	V					
9	Fuel Tank	Diesel	30 L	V					
	Water Separator	(Water-Drain)	1	V					
10	Engine Oil Filter	Cartridge	1		F				
11	Fuel Filter	Cartridge	1						
12	Hydraulic Oil Return Filter	Element	1			F			
13	Air Cleaner (Outer)	Element	1			C			
	Air Cleaner (Inner)	Element	1						
14	Hydraulic Oil Suction Strainer	Strainer	1			F			
15	Air Breather Filter	Element	1						

V: Maintenance and Refill.

C: Cleaning.

F: First Time Exchange Only.

F100: Every 10 Hours For First 100 Hours.

W10: Every 10 Hours If Operating In Water.

: Replacement On Every Interval.

NOTE: *For additional service items see list of "Maintenance Intervals" on page 4-10.*