Certain specification(s) are based on engineering calculations and are not actual measurements. Specification(s) are provided for comparison purposes only and are subject to change without notice. Specification(s) for your individual Doosan equipment will vary based on normal variations in design, manufacturing, operating conditions, and other factors. Pictures of Doosan units may show other than standard equipment

Powered by **Innovation**

DOOSAN

Hyundai Doosan Infracore

489 Injung-ro, Dong-gu, Incheon, South Korea
http://global.doosanequipment.com

DIPBE-00-2111

Hyundai Doosan Infracore is an affiliate of Hyundai Heavy Industries Group.
The Doosan trademark, DOOSAN, is used under license from Doosan Corporation.

DOOSAN

Construction Equipment

DX300LCA-7M

Photos may include optional equipment

Powered by **Innovation**

TIME FOR AN ABSOLUTE GAME CHANGER

DX300LCA-7M

Representing a Tough New Generation, An Ultimate Formula to Solve All Constructional Matters

BEST IN CLASS EFFICIENCY WITH

DX300LCA-7M is the most efficient model in terms of production per fuel consumption. It offers smart and innovative solutions which serve to increase long term profit. A standard auto-idle feature and relief cutoff, and harmonized hydraulic system to serve best fuel efficiency.

A CONSTANT TERM OF ABSOLUTE QUALITY

DX300LCA-7M is featured by reinforced heavy-duty arm and boom with fortified undercarriage to withstand high-impact materials. Designed using reliable element and formed in optimal structural integrity. Ensuring long life and high uptime even in extreme job sites.

BRING YOU A GEOMETRICAL PROGRESSION ON PRODUCTIVITY

DX300LCA-7M guarantees the best productivity at all job sites. Smooth and fast speed guaranteed by perfectly matched engine and hydraulic system. Superior workload along with lifting capacities and traction force, all combined for the overwhelming performance. Powered by a reliable Doosan engine, which delivers unparalleled power and large capacity of swing motor provide the biggest swing torque.

Doosan is here to offer the exact formula for your business

Time for a new tough generation. It is not about a choice between little enhancement on productivity or a slight improvement in fuel efficiency. It is about a radical shift from custom, and about a breakaway from norm. Representing a new generation of Doosan excavator, DX300LCA-7M would be a complete game changer to overturn the industry.

DX300LCA-7M, a union set including elements of power, speed and controllability. Simultaneously it is an intersection set where performance and efficiency meet. It's a geometrical progression on productivity, and a limitless range of possibilities. A constant term assuring the durable quality and a value of your all of your constructional problems.

Take on a new wave. A different approach, a different vision. A statement of a bold new era and a statement of absolute performance. DX300LCA-7M, finally an absolute turning point to utterly change your business.

WE ARE BACK WITH NEW FEATURES

All The Nice Features of Previous Model Bodily Succeeded, Even Nicer Things to Come

ROPS CERTIFIED CABIN (OPTIONAL)

One of the most spacious cabs in the market, with low noise & vibration levels and excellent all-round visibility. Offered with fully adjustable suspension seat, air conditioning with climate control as standard.

ADVANCED H+ CLASS BUCKET

Bucket robustness fortified by increased the area of the abrasion resistant plate. Applying heel saver and edge saver to significantly increase the durability of bucket

ETP (ELECTRIC TRANSFER PUMP) (OPTIONAL)

Use this switch to easily refill fuel for your machine after its inspection or repair.

SIDE AND REAR VIEW CAMERA (OPTIONAL)

Optional side and rear-view camera keep watch in ways beyond operator's sight. Additional LED lighting system attached on each side for the clear identification.

*Option spec info is included to the images contained in this material and may not be the same with the actual specs.

8-INCH TOUCH MONITOR

New, user-friendly bigger LCD color monitor with full access to machine settings and maintenance data.

ADDITIONAL WORKING LAMP (OPTIONAL)

New additional working lamp contributes to enhanced safety through improved illumination.

ADVANCED UNDERCARRIAGE

Heavy duty X- shaped undercarriage with integrated track spring and idler. Offered with durable box section track frame. The sprocket structure and tooth have been strengthened to prevent debris and increase durability.

WATER SEPARATOR

A filter-type high-performance water separator effectively filters moisture out in the fuel, reducing impurities and helping minimize engine issues.

DOOSANCONNECT® TELEMATICS SERVICE (OPTIONAL)

Offering ‘preventive maintenance service’ based on machine operating data. Providing an expert level consultation to dealers. Functioning as fleet management tool for the customers.

OIL WASHED PRE-CLEANER (OPTIONAL)

Oil washed pre-cleaner provides better filtering in dusty environments. Increased maintenance interval resulting in more uptime.

HEAVY-DUTY FRONT

Reinforced castings and forged steel pivot points. Reinforced heavy-duty arm and boom with new optional boom floating system. To better protect the base of the arm, reinforced bars have been added and the arm center and end boss have been strengthened.

INCREASED CONTROLLABILITY

Joystick and Switches integrated in control stand for precise operation. All switches grouped together and ergonomically positioned to the right.

TOP NOTCH PRODUCTIVITY

A Powerful Partner With Supercharged Engine, Biggest Swing Torque and Innovative Features

Every work brings a new challenge, but true worker grows with its tasks. DX300LCA-7M you can take even the heaviest work with ease, along with smart features. Supercharged Doosan in-house engine provides excellent force and torque characteristics, while improved hydraulic system get the most out of the engine power. Large capacity of swing motor provide the biggest swing torque in the industry.

More innovations delivers even more impressive performance. EPOS™ hydraulic system ensures the engine power to be exactly delivered. Electronically controlled hydraulic pump efficiently changes speed of front movement depending on the hydraulic flow consumption of attachment usage. DX300LCA-7M will help you balance productivity in the way that best suits your business.

DOOSAN ENGINE (DE08TIS)

The DE08TIS is a whole new mechanical engine built on Doosan's continuously evolving engine technology. Greater engine outputs of 181kw and impressive torque enables to precisely deliver the power you need. Our many years of experience in engine design and production have resulted in both efficient and powerful engine. Delivering greater engine output through various system improvements.

EPOS™ (ELECTRONIC POWER OPTIMIZING SYSTEM)

The smart EPOS™ provides a perfectly synchronized communication link between the engine's electronic control unit and the hydraulic system. A CAN (Controller Area Network) system enables a constant flow of information between the engine and hydraulic system, to ensure power is delivered exactly as needed.

ELECTRONICALLY CONTROLLED HYDRAULIC PUMP

Electronically control the pump by generating virtual hydraulic flow, which effectively works on effectively reduce fuel consumption and high productivity.

This control enables to change speed of front movement depending on the hydraulic flow consumption of linked attachment. Upgraded operational ease guarantees linear and smooth movement of attachment. Hydraulic flow can be controlled by the intuitive button or switch.

SWING DRIVE

Swing drive minimizes shock during rotation, while making increased torque available to ensure rapid cycles.

TOP

DOOSAN

TRUE STRENGTH, HARDENED BY EXPERIENCE

Outstanding Quality to Achieve Long Lasting Performance, Based on Accumulated History

Obsession in quality is our commitment. Being the firm deposition through tough challenges, DX300LCA-7M is a collection of all virtues accumulated by Doosan's history. Durable, reliable and robust, ensuring long life and high uptime, it is an equipment you can count on under demanding conditions.

DX300LCA-7M offers outstanding quality underpinned by unflagging engineering and extensive testing. Increased lifespan of components by improved abrasion-resistance and additional protection. Enhanced durability achieved through applying highly robust materials to structures of overall frames. Lasting technology and structural design completed by thorough analysis, enable Doosan's equipment to last under the harshest conditions.

HEAVY DUTY BOOM & ARM

The strong and durable structure includes a reinforced boom and arm made from high strength tensile steel for maximum reliability. Combined with thicker material, mechanical stress is equally distributed and both reliability and component life are increased. To better protect the base of the arm, reinforced bars have been added and the arm center.

EM (ENHANCED MACROSURFACE) BUSHING

The bucket pivot features EM (Enhanced Macrosurface) bushings. A highly lubricated metal to increase the lifespan and extend greasing intervals. A tailored surface pattern and self-lubricating coating for optimized greasing and for more efficient debris removal.

ABRASION-RESISTANT ARM END DISK

New disks have been adopted to increase wear resistance and service intervals. Used polymer shim with hard metal disk for less abrasion.

HEAVY DUTY UNDERCARRIAGE
Advanced undercarriage with strengthen sprocket structure and tooth. Two guards per track as standard, Offered with durable box section track frame.
Heavy duty X- shaped undercarriage ensures optimum structural integrity and durability. Cast steel heavy-duty sprockets guarantee the highest resistance and thick and solid plates providing maximum durability in harsh conditions.

INTEGRATED TRACK SPRING AND IDLER
The track spring and idler have been joined directly for even greater durability and improved maintenance convenience.

NEVER DONE THIS MUCH BY SO LITTLE

Best Fuel Efficiency Guaranteed by Innovative Solutions

DX300LCA-7M is the most efficient model in terms of "production per fuel consumption". Advanced systems combined with innovative integration, result in significantly increased performance and fuel efficiency.

A auto-idle feature which automatically puts the engine and pump into the standby mode when it detects a pause. Doosan's engine and pump matching technology, not only economical but also environmentally responsive with significantly reduced exhaust fumes. Regulation and precise control of the flow rate required by the equipment are available as standard. DX300LCA-7M's comprehensive range of innovative technology ensure to do more with low fuel consumption and overall operating costs.

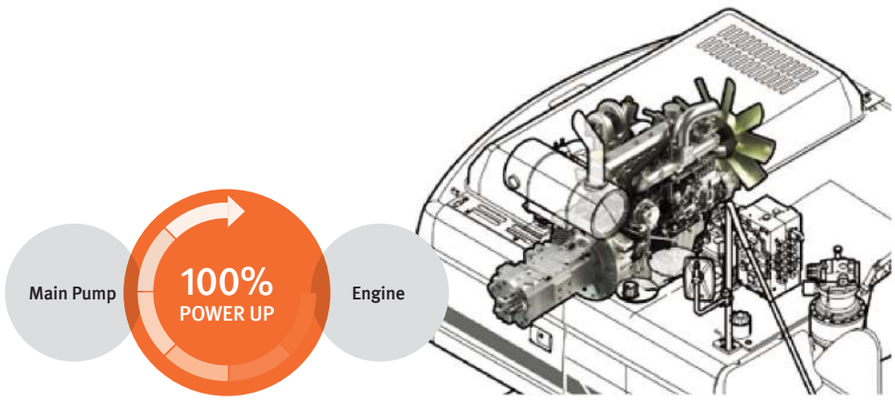

RELIEF CUTOFF

DX300LCA-7M is equipped with a relief cutoff system. The system automatically detects excess hydraulic pressure in the cylinder and controls it by redirecting the hydraulic flow back to the main pump. Relief cutoff system distributes excessive pressure in hydraulic components to be maintained in the optimal state.

AUTO IDLE

A standard auto-idle feature reduces engine rpm when the steering wheel or joystick isn't being used. The system automatically puts the engine and pump into the standby mode when it detects a pause during operation. The engine will be automatically switched off when the machine is inactive for a pre-set amount of time. This function helps reduce fuel consumption by lowering idling RPM.

PUMP MATCHING TECHNOLOGY

Pump matching technology resolves problems as the low response time of the system and unnecessary fuel consumption. Matching the response time between pump and engine efficiently reduces unnecessary fuel consumption as well as reducing exhaust fumes.

VBO (VIRTUAL BLEED OFF) SYSTEM

VBO system is Doosan's own hydraulic system based on "Doosan electronic controlled pump" Generally, most excavators use hydraulic system, transferring the energy by using hydraulic flow. In order to facilitate the rapid response to the joystick signal, this hydraulic flow is continuously generated from the pump even when the excavator is not in operation. On the contrary, VBO system 'virtually' generates the hydraulic flow through the electronic sensor. Due to its means, customer can be benefited from VBO system in every way. Not to mention the fuel efficiency and the safe sustenance of the system, but also immediate response and familiar controllability, the strength of existing hydraulic system.

TOTAL COMFORT IN A REACH

You are at the Center of Comfort and Control

Receive an exclusive collection of services designed to help uncomplicate your work. Ergonomic command center and a safe resting area. DX300LCA-7M included a wide range of features you could possibly need for your task. Designed to meet operational need thoroughly, the high-definition display control lever and other intuitive features brings absolute controllability in your fingertips.

For both bodily comfort and peace of mind, Enjoy your enhanced personal space with completely re-designed cabin interior with climate control systems, air suspension seat and various convenient features. All elements provided to ensure the operator to work in safe and comfortable condition no matter the work site is. Work will be altogether more pleasant with DX300LCA-7M's cabin, optimally prepared for both energetic work and relaxed break.

DX 300LCA

1. SMALL DETAILS ADD THE FEELING OF REFINEMENT

Heating and ventilation, air conditioning system upgraded for pleasant environment. USB charger and sunglass case is also equipped for additional comfort.

2. SPACIOUS CABIN COMFORT

Refined interior with enhanced legroom and extendable storage space guarantees a serene ride to you. A more orderly interior equipped with high-class designed upholstery and thoroughly changed comfort accessories. This ensures operator to have a clear and uncluttered workplace at all times.

3. AIR SUSPENSION SEAT (ROPS, OPTIONAL)

The optional, air- suspended seat provides pleasant seating conditions and a high level of comfort. Equipped with various functions of adjustment forth and back. With lumbar support, it reduces the vibration of equipment in an effective way.

4. ERGONOMICALLY DESIGNED WORK PEDAL

Ergonomically designed work pedals placed at both ends. Pedal angle adjusted to relieve the pressure on ankle and joints, reducing fatigue and to lessen the load of operator.

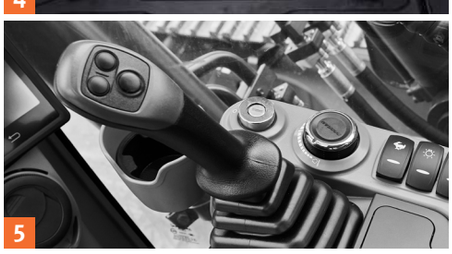

5. CONTROL LEVER

Precise control of the equipment increases versatility, safety and facilitates tricky operations requiring great precision. Leveling operations and the movement of lifted load made easier and safer.

6. REAR VIEW CAMERA (OPTIONAL)

Optional rear-view camera increases safety by giving visibility beyond operator's sight. Additional LED lighting system attached on each side for the clear identification.

7. 8-INCH MONITOR

New, user-friendly LCD color monitor with full access to machine settings and maintenance data.

8. SIMPLE OPERATION

Precise control of the equipment increases versatility, safety and facilitates tricky operations requiring great precision. Leveling operations and the movement of lifted load made easier and safer. Joystick and Switches integrated in control stand for precise operation.

1. SMALL DETAILS ADD THE FEELIN
2. SPACIOUS CABIN COMFORT
3. AIR SUSPENSION SEAT (ROPS,
4. ERGONOMICALLY DESIGNED W
5. CONTROL LEVER
6. REAR VIEW CAMERA (OPTIONA
7. 8-INCH MONITOR
8. SIMPLE OPERATION

 * Option spec info is included to the images contained in this material and may not be the same with the actual specs.

EELING OF REFINEMENT
RT
OPS, OPTIONAL)
ED WORK PEDAL

IONAL)

ALWAYS ON SITE BY SIMPLIFIED MAINTENANCE

Keep Your Engine Turning, Without Maintenance Stress

Punctuality is one of the most important virtue to keep your business rolling. To uphold this virtue, Doosan provides simple solution for maximum uptime. DX300LCA-7M is always poised for action with short maintenance operations and increased service interval of many components.

Easy maintenance and bespoke service eliminating any potential waste on time based on your operation and business. Centralized grease inlets are designed for simple routine maintenance. Extensive service network and expert assistance are also readily available, DoosanCONNECT provides you the operational machine data in an hourly cycle and broad range of service to get the most productivity out of your equipment. Doosan helps you to keep your promise to be on time.

PRE-CLEANER

Rotor type dry pre-cleaner attached as a standard option.

CENTRALIZED GREASE INLETS FOR EASY MAINTENANCE

The boom & arm grease inlets are grouped for easy access. Remote grease points make it easier to lubricate hard-to-reach pins on the lift arm and articulation system.

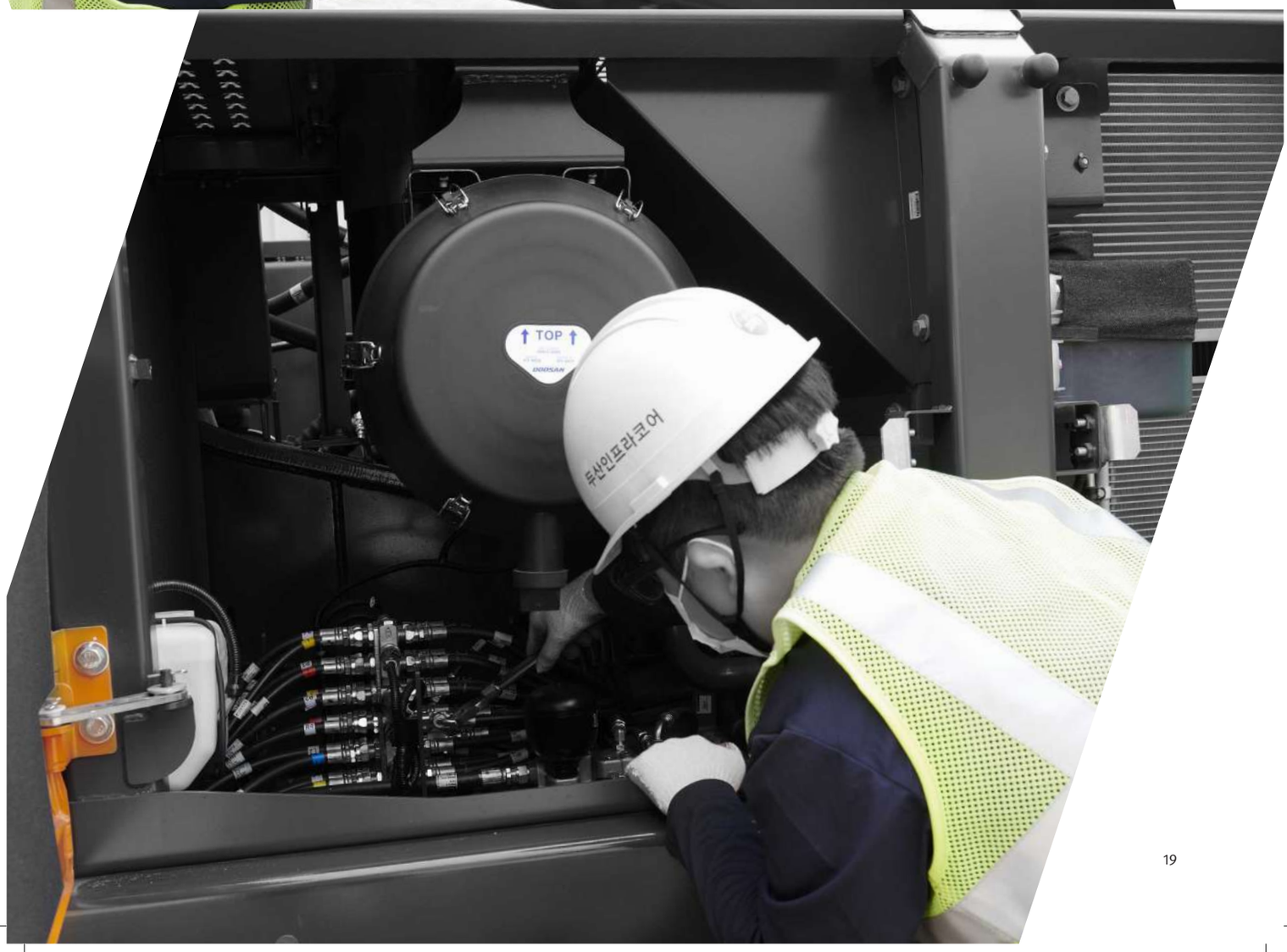
TOP
DOOSAN
두산인프라코어

DOOSAN
DOOSAN

DOOSAN CONNECT (OPTIONAL)

Allowing various parameters to be checked during maintenance procedure, such as pump pressure and engine rotation speed. Parameters can be stored and printed for subsequent analysis.

HYDRAULIC OIL RETURN FILTER

Protection of the hydraulic system has been made more effective by applying glass fiber filter technology to the main oil return filter. More than 99.5% of foreign particles are filtered out, significantly increasing oil change interval.

AIR CLEANER

Air cleaner of large capacity removes 99% of airborne particles, reducing the risk of engine contamination.

WATER SEPARATOR

Highly efficient water separator in fuel to prevent engine damage by removing moisture. Reducing the risk of external engine contamination and lengthen the engine's lifespan.

ETP (ELECTRIC TRANSFER PUMP) (OPTIONAL)

Use this switch to easily refill fuel for your machine after its inspection or repair.

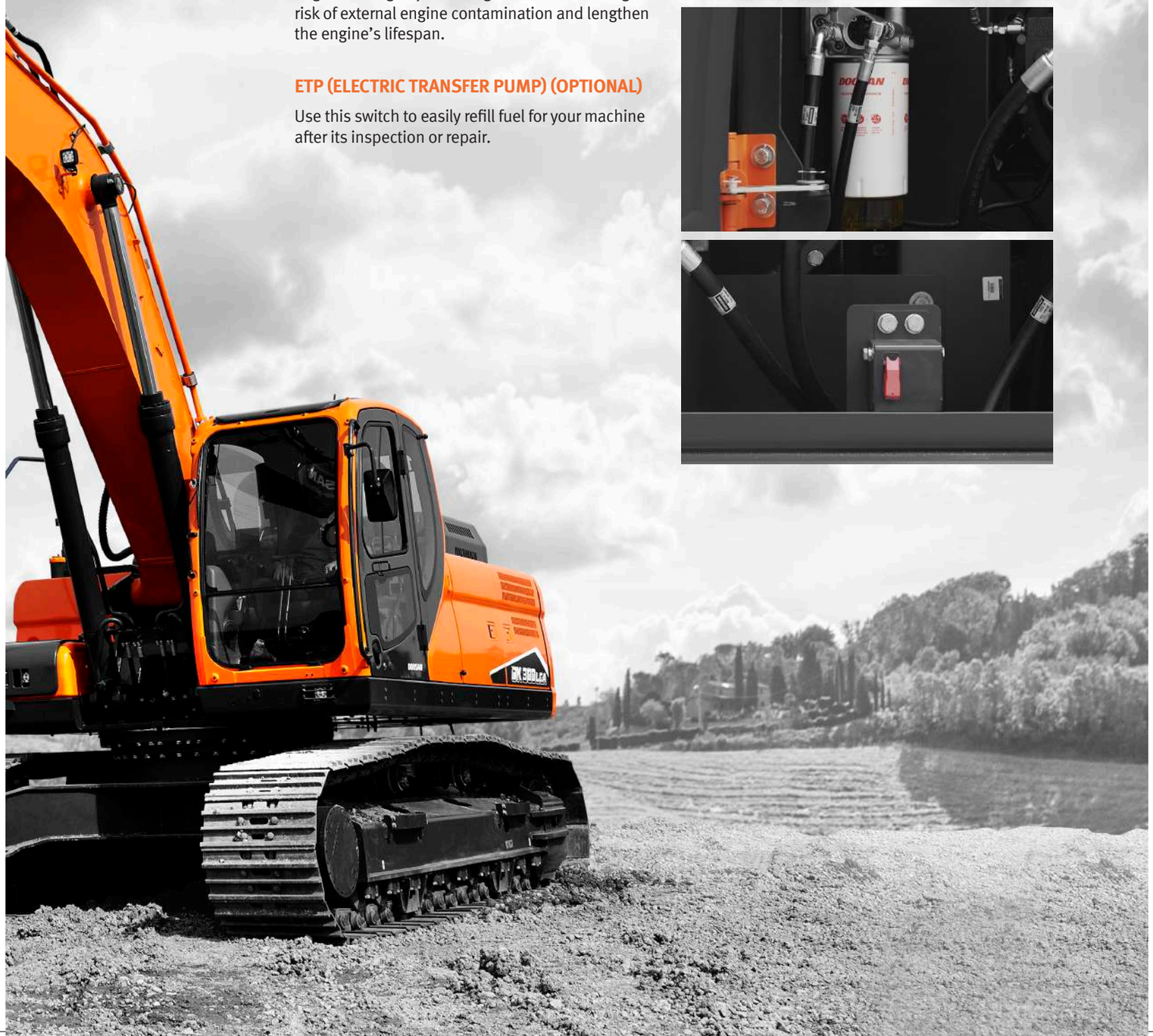

DoosanCONNECT® Telematics Service (OPTIONAL)

TELECOMMUNICATIONS Data flow from machine to web

TELEMATICS SERVICE TERMINAL

Telematics Service terminal is installed to machine / connected to EPOS™

TELECOMMUNICATION

GPS, EPOS™ data is sent to sedignated server by GSM, Satellite telecommunication

DOOSAN TELEMATICS SERVICE WEB

Doosan, Dealer, Customer can easily monitor the GPS, EPOS™ data from Core Telematics Service web

TELEMATICS SERVICE BENEFITS Doosan and dealer support customers to improve work efficiency with timely and responsive services

CUSTOMER

Improve work efficiency
- Timely and preventive service
- Improve operator's skills by comparing work pattern
- Manage fleet more effectively

DEALER

Better service for customers
- Provide better quality of service
- Maintain machine value
- Better understanding of market needs

DOOSAN

Responsive to customer's voice
- Utilize quality-related field data
- Apply customer's usage profile to deveping new machine

FUNCTIONS (WEB/APP) Doosan Telematics Service provides various functions to support your great performance

• GPS

• Fuel information

• Preventive maintanance

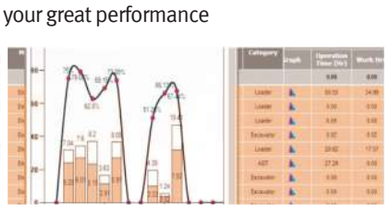

• Operation hours

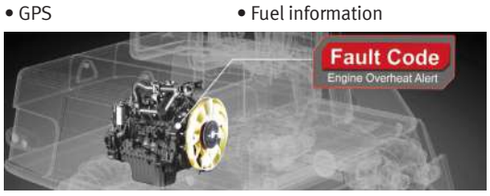

• Fault code / warning

• ADT Productivity

• Reports

FUNCTION		EXCAVATOR	WHEEL LOADER	ADT
GPS	· Location · Geo-fence	All models	All models	All models
Operation hours	· Daily, Weekly, Monthly report	All models	All models	All models
Operation hours	· Total operation hours · Operation hours by mode	All models Tier 4 only	All models	All models
Maintenance parts	· Preventive maintenance by item replacement cycle	All models	Tier 4 only	All models
Fault code / Warning	· Fault code · Machine Warnings on Gauge Panel	All models	Tier 4 only	All models
Fuel information	· Fuel level · Fuel consumption	All models Tier 4 only	Tier 4 only	All models
Dump capacity	· Dump tonnage · Count of Work Cycle	N/A	N/A	All models

GLOBAL PARTS NETWORK

QUALITY-PROVEN MAIN COMPONENTS

Doosan provides fast and precise worldwide delivery of genuine Doosan parts through its global PDC (parts distribution center) network.

GLOBAL NETWORK

The global network of the GPDC (Global Parts Distribution Center) maximizes its supply rate by making sure that each center is stockpiled with all the critical parts required for businesses in its area. The network also minimizes the time and costs required for parts delivery by positioning PDCs close to major markets around the world. Doosan PDCs communicate with customers in their time zone, informing them that they are open for operation, and deliver parts to them as early as possible.

THE GLOBAL PARTS DISTRIBUTION CENTER NETWORK

PDCs had been set up as shown below, including Mother PDC in Ansan, Korea. The nine other PDCs include one in China (Yantai), Four in USA (Seattle and Atlanta, Suwanee, Miami), two in Europe (Germany and the UK), one in the Middle East (Dubai) and one in Asia (Singapore).

PDC BENEFIT					
	Distribution Cost Reduction	Maximum Parts supply rate	Shortest distance/ time parts delivery	Real-time service support	Minimum downtime

TECHNICAL SPECIFICATION

ENGINE

Model

Doosan DE08TIS
2 valves per cylinder, vertical injectors, water cooled, turbo charged with air to air intercooler. The emission levels are well below the values required for Tier/Stage-II.

Number of cylinders

6

Nominal flywheel power

215 HP @ 2,150 rpm

Max torque

90 kgf.m @ 1,300 rpm

Piston displacement

8,071 cc (492.5 cu.in)

Bore & stroke

111 mm x 139 mm (4.37" x 5.47")

Starter

24 V / 80 A

Batteries

2 X 12 V / 150 Ah

Air cleaner

Double element with auto dust evacuation.

HYDRAULIC CYLINDERS

The piston rods and cylinder bodies are made of high-strength steel. A shock absorbing mechanism is fitted in all cylinders to ensure shockfree operation and extend piston life.

Cylinders	Quantity	Bore x Rod diameter x stroke
Boom	2	140 x 95 x 1,450 mm
Arm	1	150 x 105 x 1,670 mm
Bucket	1	135 x 90 x 1,150 mm

ARM DIGGING FORCE

	Length (mm)	Weight (kg)	Digging Force (Nom/Press Up, Ton)
STD. ARM	3,100	1,045	[SAE] 13.0 / 13.7, [ISO] 13.2 / 14.0
HD ARM 1	3,100	1,140	
SHORT ARM	2,500	967	[SAE] 15.7 / 16.6, [ISO] 16.1 / 17.0
HD ARM 2	2,850	1,085	[SAE] 14.7 / 15.5, [ISO] 15.0 / 15.8
LONG ARM	3,750	1,178	[SAE] 11.5 / 12.2, [ISO] 11.7 / 12.4
SLR ARM	7,000	1,448	[SAE] 7.0 / 7.4, [ISO] 7.1 / 7.5

HYDRAULIC SYSTEM

The heart of the system is the EPOS™ (Electronic Power Optimizing System). It allows the efficiency of the system to be optimized for all working conditions and minimizes fuel consumption.

- The hydraulic system enables independent or combined operations.
- Two travel speeds offer either increased torque or high speed tracking.
- Cross-sensing pump system for fuel savings.
- Auto deceleration system.
- Two operating modes, two power modes.
- Button control of flow in auxiliary equipment circuits.
- Computer-aided pump power control.

Main pumps

2 variable displacement axial piston pumps
Max flow : 2 x 266 l/min

Pilot pump

Gear pump - max flow : 28.5 l/min

Maximum system pressure

Normal mode : 350 kgf/cm^2
Power mode : 370 kgf/cm^2
Travel : 350 kgf/cm^2
Swing : 295 kgf/cm^2

SWING MECHANISM

- An axial piston motor with two-stage planetary reduction gear is used for the swing.
- Increased swing torque reduces swing time.
- Internal induction-hardened gear.
- Internal gear and pinion immersed in lubricant bath.
- The swing brake for parking is activated by spring and released hydraulically.

Swing speed : 0 to 9.6 rpm

BUCKET DIGGING FORCE

Bucket Type	Capacity (m^3) SAE	DIGGING FORCE (NOM/PRESS UP, TON)
G.P.	0.8 / 1.03 / *1.16 / 1.27 / 1.5 / 1.75	[SAE] 16.7 / 17.6 [ISO] 18.9 / 20.0
H CLASS	1.04 / 1.2 / 1.47 / **1.5 / 1.6 / 1.72	[SAE] 17.4 / 18.3 [ISO] 19.1 / 20.2
H+ CLASS	1.47	
S CLASS	1.2 / 1.45 / 1.57 / ***1.6	[SAE] 17.0 / 17.9 [ISO] 19.1 / 20.2
S+ CLASS	1.45	
DITCH	0.45 / 0.54 / 0.64	[SAE] 8.6 / 9.1 [ISO] 10.0 / 10.5

WEIGHT

HD Boom 6,245 mm (20'6") HD Arm 3,100 mm (10'2") Bucket SAE H Class 1.5 m^3 (1.96 yd^3)

	Shoe width	Operating weight	Ground pressure
Triple Grouser	(Std) 600 mm (2')	31,400 kg (69,225 lb)	0.60 kgf/cm^2
Double Grouser	600 mm (2')	32,100 kg (70,768 lb)	0.62 kgf/cm^2
Triple Grouser	700 mm (2' 3")	32,000 kg (70,548 lb)	0.53 kgf/cm^2
Triple Grouser	800 mm (2' 6")	32,400 kg (71,430 lb)	0.47 kgf/cm^2
Triple Grouser	850 mm (2' 8")	32,600 kg (71,871 lb)	0.44 kgf/cm^2

UNDERCARRIAGE

Chassis are of very robust construction, all welded structures are designed to limit stresses. High-quality material used for durability. Lateral chassis welded and rigidly attached to the undercarriage. Track rollers lubricated for life, idlers and sprockets fitted with floating seals.

Tracks shoes made of induction-hardened alloy with double grouser. Heat-treated connecting pins. Hydraulic track adjuster with shock-absorbing tension mechanism.

Number of rollers and track shoes per side

Upper rollers : 2 (Standard Shoes)
Lower rollers: 9
Shoes : 48 x 2
Total length of track : 4,950 mm (16' 3")

DRIVE

Each track is driven by an independent axial piston motor through a planetary reduction gearbox.
Two levers with control pedals guarantee smooth travel with counterrotation on demand.

Travel speed (fast / slow)

5.3 / 3.0 km/h (3.3 / 1.9 mph)

Maximum traction force

15,700 / 28,300 kgf (34,612 / 62,390 lbf)

Maximum grade

35 (70%)

ENVIRONMENT

Noise levels comply with environmental regulations (dynamic values).

Sound level guarantee

110 DB (A) (2000/14/EC)

Cab sound level

75 DB (A) (ISO 6396)

REFILL CAPACITIES

Fuel tank

500L (132.1 US gal)

Cooling system (Radiator capacity)

30.6 L (8.1 US gal)

Engine oil

34 L (9.0 US gal)

Swing drive

7 L (1.8 US gal)

Final drive
(each = Travel Device = travel motor + travel reduction gear)

2 X 7 L (2 X 1.8 US gal)

Hydraulic tank

280 L (74.0 US gal)

BUCKET

Bucket Type	Capacity (m^3)	Width (mm)		Weight (kg)	6.245 m HD Boom			SLR BOOM
	SAE/PCSA	W/ Cutter	W/O Cutter		2.5 A	2.85 HD A	3.1 HD A	7.0 A
GP	0.8	1,167	1,083	847	A	A	A	-
	1.03	1,037	962	971	A	A	A	-
	*1.16	-	1,432	1,180	A	A	A	-
	1.27	1,445	1,376	1,090	A	A	A	-
	1.5	1,657	1,582	1,199	A	A	B	-
	1.75	1,867	1,792	1,301	B	C	C	-
H CLASS	1.04	1,108	1,070	1,024	A	A	A	-
	1.2	1,258	1,220	1,104	A	A	A	-
	1.47	1,458	1,420	1,190	A	A	B	-
	**1.5	1,657	1,582	1,234	A	A	B	-
	1.6	1,721	1,640	1,264	A	B	B	-
	1.72	1,658	1,620	1,338	B	C	C	-
H+ CLASS	1.47	1,458	1,420	1,296	A	A	B	-
S CLASS	1.2	1,242	1,210	1,391	A	A	A	-
	1.45	1,442	1,410	1,509	A	B	B	-
	1.57	1,542	1,510	1,568	B	B	C	-
	***1.6	1,721	1,640	1,482	B	B	C	-
S+ CLASS	1.45	1,442	1,410	1,673	B	B	C	-
Dtich Cleaning	0.45	-	1,500	357	-	-	-	A
	0.54	-	1,800	405	-	-	-	A
	0.64	1,167	1,083	423	-	-	-	B

* 1.16 M^3 : Rock Bucket, ** 1.5 M^3 : R1H Bucket, *** 1.6 M^3 : R1S Bucket

Based on ISO 10567 and SAE J296, arm length without quick change clamp
A : Suitable for materials with density of 2,100kg/m (3,500lb/yd) or less
B : Suitable for materials with density of 1,800kg/m (3,000lb/yd) or less
C : Suitable for materials with density of 1,500kg/m (2,500lb/yd) or less
D : Suitable for materials with density of 1,200kg/m (2,000lb/yd) or less
X : Not recommended

DIMENSIONS

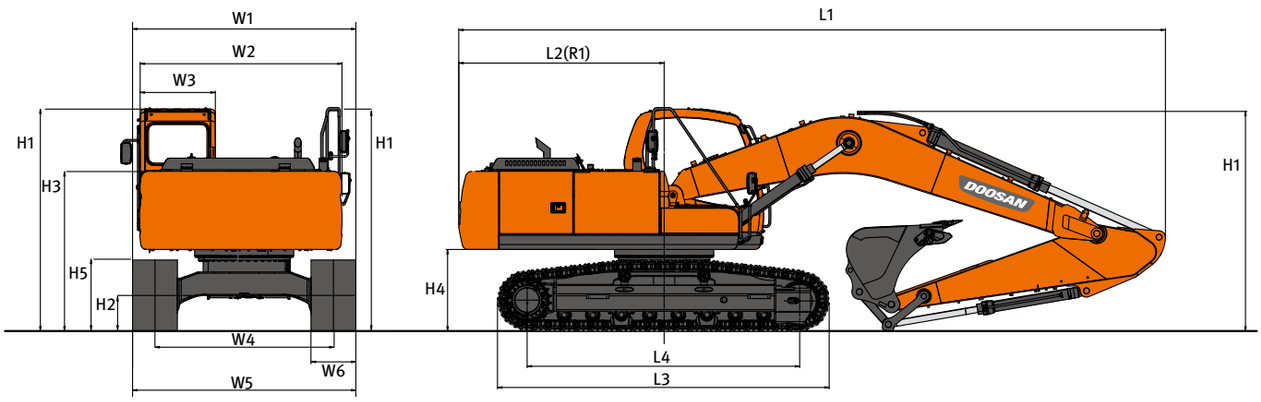

DIMENSIONS

Model					DX300LCA-7M			
Dimension					STD	OPT1	OPT2	OPT3
Boom				mm	6,245	6,245	6,245	10
Arm				mm	3.1 HD	2.85 HD	2.5	7
Bucket				m^3	1.5 H	1.5 H	1.5 H	0.64
Undercarriage (Track+Grouser)				mm	LC+TG	LC+TG	LC+TG	LC+TG
Overall	L1	Overall Length		mm	10,610	10,710	10,770	14,390
	H1	Overall Height	Boom	mm	3,265	3,495	3,385	3,365
			Hose	mm	3,370	3,615	3,495	3,475
			Cabin	mm	3,050	3,050	3,050	3,050
	W1	Overall Width (SHIPPING)		mm	3,200	3,200	3,200	3,200
	L2(R1)	Rear Swing Radius		mm	3,230	3,230	3,230	3,230
	H2	Ground Clearance*		mm	*470	*470	*470	*470
Swing Body	W2	House Width	Frame only	mm	2,960	2,960	2,960	2,960
			w/Catwalk	mm				
			w/Protector	mm	3,072	3,072	3,072	3,072
	W3	Cabin Width		mm	1,010	1,010	1,010	1,010
	H3	Height Over Cover		mm	2,200	2,200	2,200	2,200
	H4	Counterweight Clearance*		mm	*1,120	*1,120	*1,120	*1,120
Undercarriage	H5	Track Height*		mm	*970	*970	*970	*970
	L3	Track Length		mm	*4,950	*4,950	*4,950	*4,950
	L4	Tumbler Distance		mm	4,040	4,040	4,040	4,040
	W5	Undercarriage Width	STD	mm	3,200	3,200	3,200	3,200
	W6	Shoe Width		mm	600	600	600	600
		Grouser Height		mm	30	30	30	30
CAB		Cabin Height (H1'-H3)		mm	853	853	853	853

*Grouser not included

WORKING RANGES

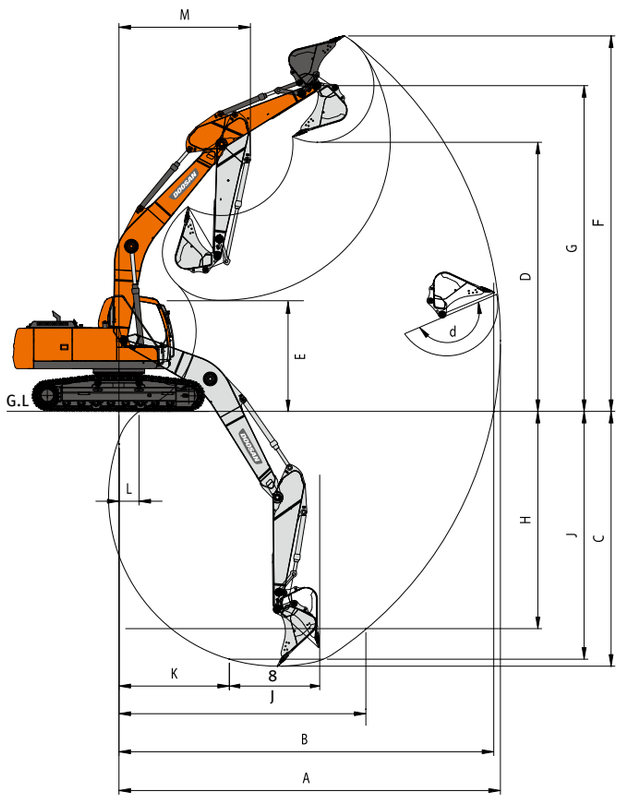

WORKING RANGE

BOOM LENGTH		mm	6,245		
ARM TYPE		mm	2,500	2,850	3,100
BUCKET TYPE (SAE / PCSA)		m^3	1.5 H	1.5 H	1.5 H
A	MAX. DIGGING REACH	mm	10,110	10,365	10,670
B	MAX. DIGGING REACH (GROUND)	mm	9,905	10,165	10,475
C	MAX. DIGGING DEPTH	mm	6,650	7,000	7,250
D	MAX. DUMPING HEIGHT	mm	7,035	7,045	7,325
E	MIN. DUMPING HEIGHT	mm	3,410	3,060	2,805
F	MAX. DIGGING HEIGHT	mm	9,935	9,895	10,245
G	MAX. BUCKET PIN HEIGHT	mm	8,585	8,600	8,880
H	MAX. VERTICAL WALL DEPTH	mm	3,620	3,765	3,940
I	MAX. RADIUS VERTICAL	mm	8,365	8,575	8,830
J	MAX. DIGGING DEPTH (8'LEVEL)	mm	6,415	6,760	7,050
K	MIN. RADIUS 8' LINE	mm	2,965	2,900	2,990
L	MIN. DIGGING REACH	mm	2,075	1,745	715
M	MIN. SWING RADIUS	mm	4,045	4,075	4,040
D.	BUCKET ANGLE (DEG)	°	175	175	175

STANDARD & OPTION

STANDARD EQUIPMENT

Boom & Arm

- 6.2 m Boom (Heavy duty)
- 3.1 m Arm (Heavy duty)

Hydraulic system

- Boom and arm flow regeneration
- Boom and arm holding valves(mcv)
- Swing anti-rebound valves
- Spare ports (control valve)
- One-touch power boost

Cabin & Interior

- All weather sound suppressed type cab
- Air conditioner & heater
- Adjustable suspension seat with head rest and adjustable arm rest
- Pull-up type front window and removable lower front window
- Room light
- Intermittent windshield wiper
- Cup holder
- Hot & cool box
- Lcd color monitor panel
- E/g rpm control dial
- Am/Fm radio + mp3 (usb)
- Remote radio on/off switch
- 12v,24v power socket
- Serial communication port for laptop pc interface
- Joystick lever with 3 switches

Safety

- Large handrails and step
- Convex metal anti-slip plates
- Seat belt
- Hydraulic safety lock lever
- Safety glass
- Hammer for emergency escape
- Right and left rearview mirrors

Others

- Double element air cleaner
- Additional water separator
- Dry type pre cleaner
- Fuel filter
- Dust screen for radiator/oil cooler
- Engine overheat prevention system
- Engine restart prevention system
- Self-diagnostic system
- 80A Alternator (24V, 50)
- Electric horn
- Halogen working lights (frame mounted 1, boom mounted 2)
- Hydraulic track adjuster
- Track guards
- Greased and sealed track link
- Hydraulic oil tank air breather filter
- Long & fixed track
- Counterweight (5.4 Ton)

OPTIONAL EQUIPMENT

Some of optional equipments may be standard in some markets. Some of this optional equipment is not available in some markets. You must check with the local DOOSAN dealer to know about the availability or to release the adaptation following the needs of the applications

Boom & Arm

- 2.85 m Arm (Heavy Duty)
- 2.5 m Arm
- 3.1 m Arm
- 10.0 m Boom (& 7.0 m Arm)

Safety

- Boom and arm hose rupture protection valve
- Overload warning device
- FOGS (ISO 10262, FOGS standard)
- Travel & Swing alarm
- Rotating beacon
- LED lights
- Side & rear view camera
- Alarm (travel, Swing, QC)
- Lock valve
- Cabin front guard (Upper and lower guard)

Cabin & Interior

- Air suspension seat
- Rain shield
- High seat mount
- Breaker pedal
- Artificial leather
- Steel roof cover
- Additional mirror
- DAB Audio
- ROPS/FOGS Cabin

Others

- Rotating piping
- Piping option
  - Piping for crusher
  - Piping for breaker
  - Piping for quick clamp
- Shoe (mm)
  600 TG / 700 TG / 800 TG / 850 TG / 600 DG
- Lower wiper
- Fuel filler pump
- Working Lights
  - 4-front / 2-rear on cabin
  - 2-front on cabin
- Hydraulic oil
  - Cold weather (VG32)
  - Normal (VG46)
  - Tropical weather (VG68)
- Breaker filter
- Water separator with heater
- Heavy duty under cover
- Short & Fixed track
- Heavy duty & Fixed track
- Counterweight (6.4 Ton for SLR)